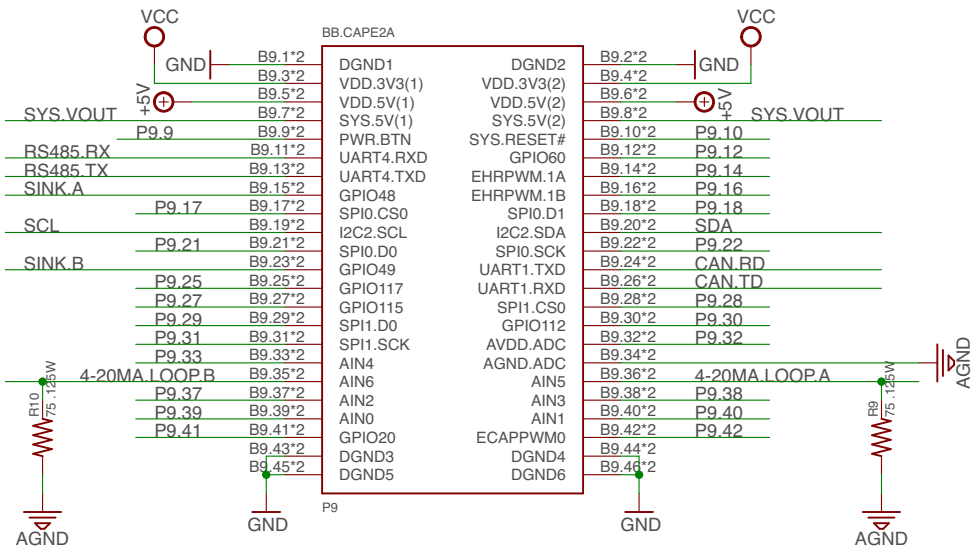

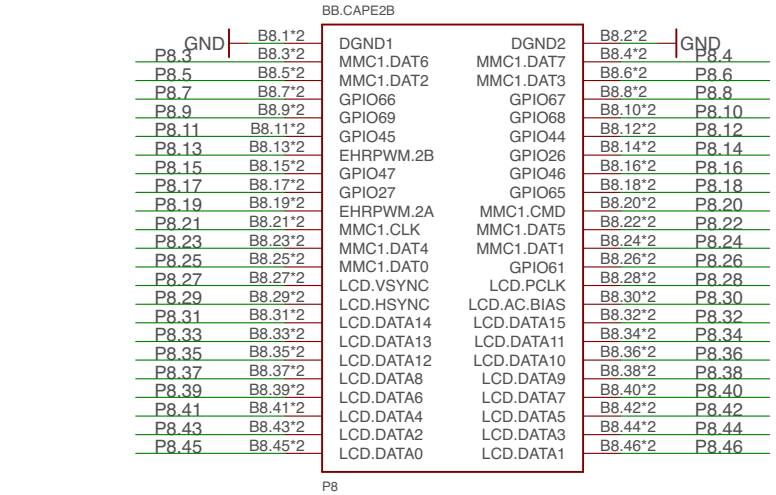

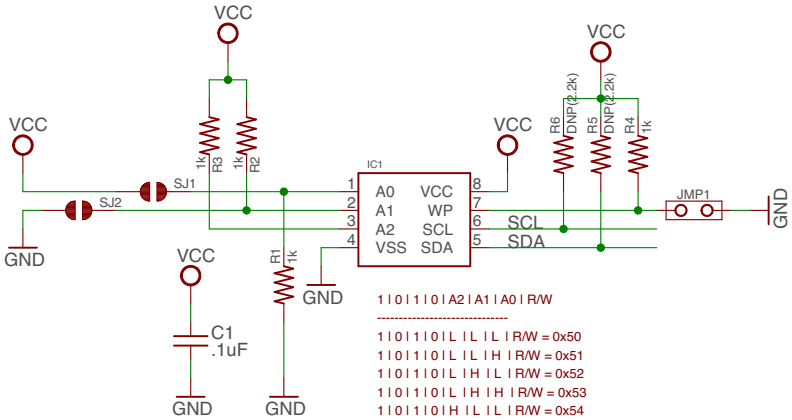

1 | 0 | 1 | 0 | A2 | A1 | A0 | R/W

---

1 | 0 | 1 | 0 | L | L | L | R/W = 0x50
1 | 0 | 1 | 0 | L | L | H | R/W = 0x51
1 | 0 | 1 | 0 | L | H | L | R/W = 0x52
1 | 0 | 1 | 0 | L | H | H | R/W = 0x53
1 | 0 | 1 | 0 | H | L | L | R/W = 0x54
1 | 0 | 1 | 0 | H | L | H | R/W = 0x55
1 | 0 | 1 | 0 | H | H | L | R/W = 0x56
1 | 0 | 1 | 0 | H | H | H | R/W = 0x57

beagleboard.org®

BeagleBone Headers and EEPROM

TITLE: Comms_Cape

Document Number:

REV: A2

Date: 6/4/18 2:42 PM

Sheet: 1/1

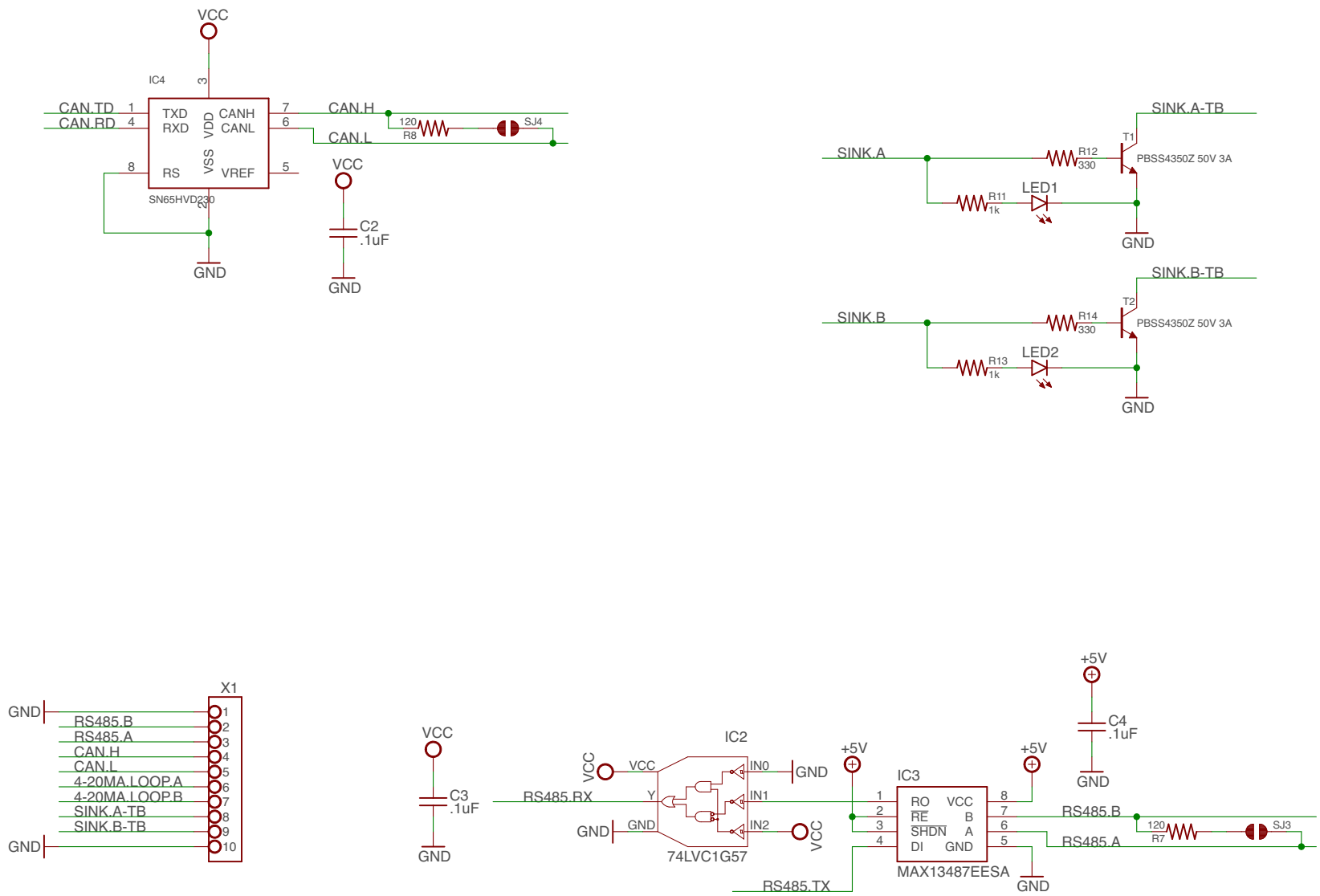

beagleboard.org®

CAN and RS485 ICs
and
Sink transistors

TITLE: Comms_Cape

Document Number:

REV: A2

Date: 6/4/18 2:42 PM

Sheet: 1/1